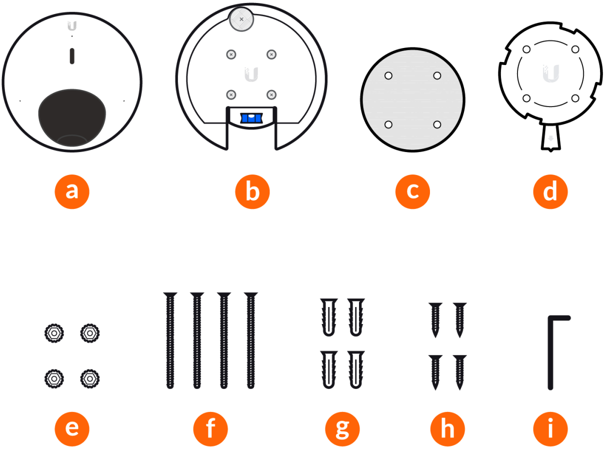

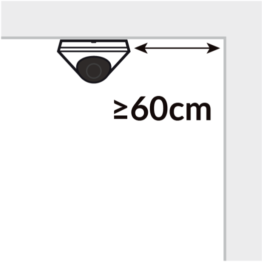

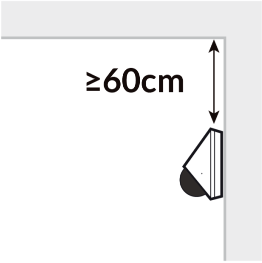

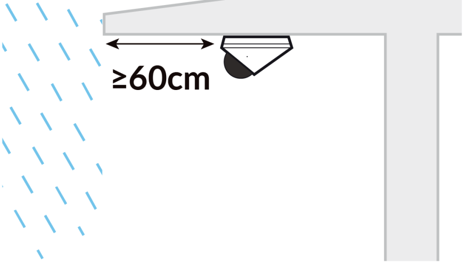

✓

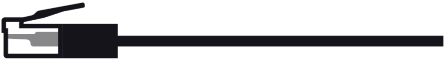

✗

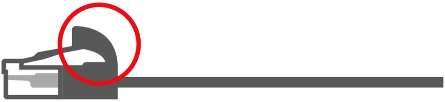

✗

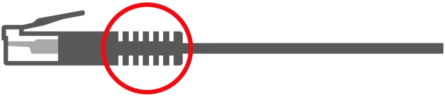

A

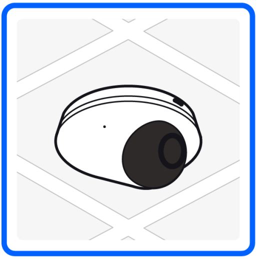

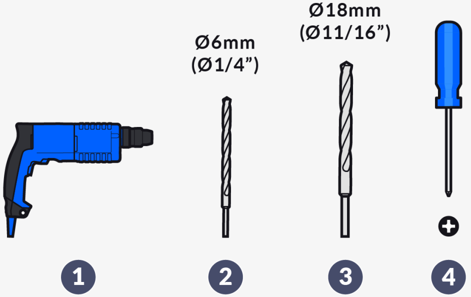
Ø6mm
(Ø1/4”)
Ø18mm
(Ø11/16”)
1
2
3
4

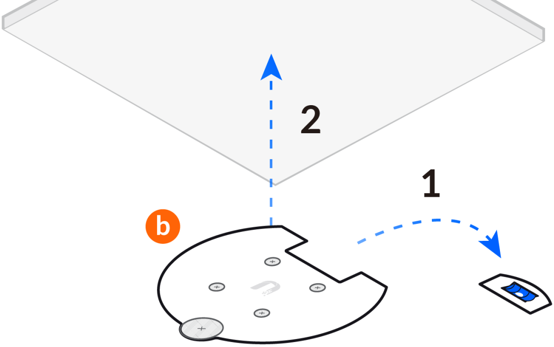

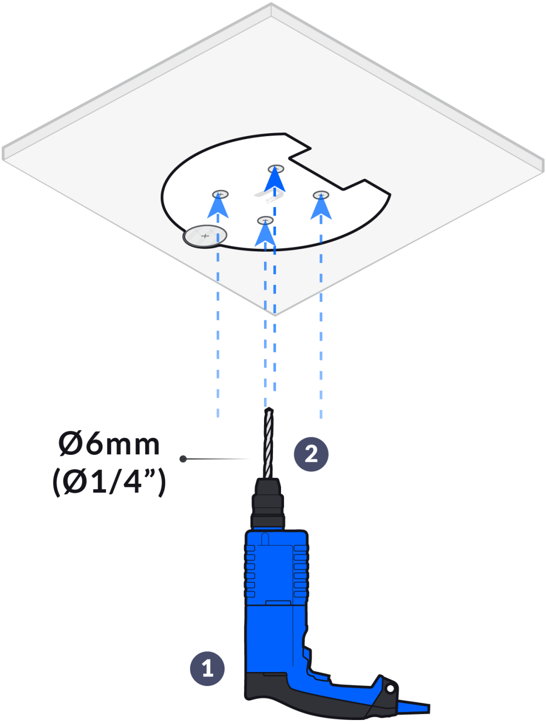

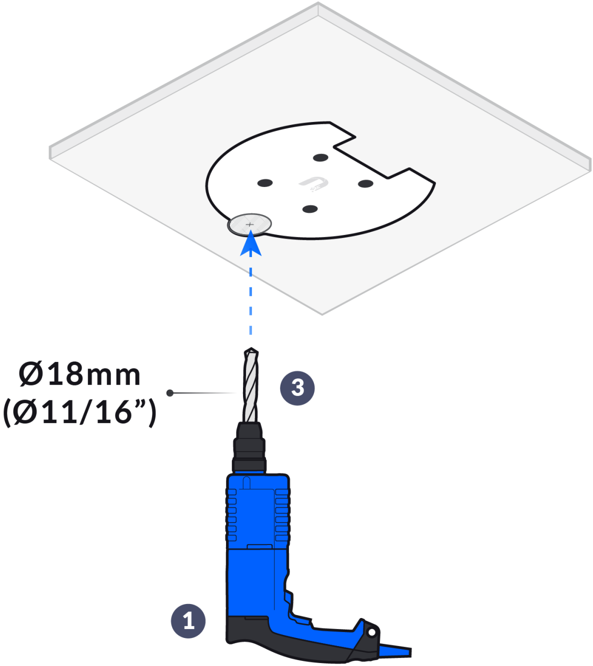
Ø18mm
(Ø11/16”)
3
1

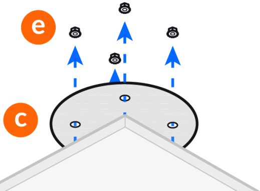

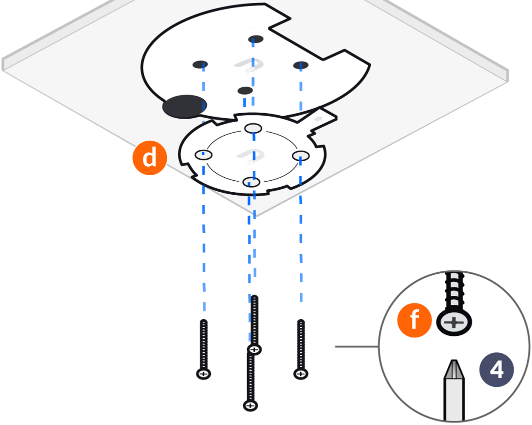

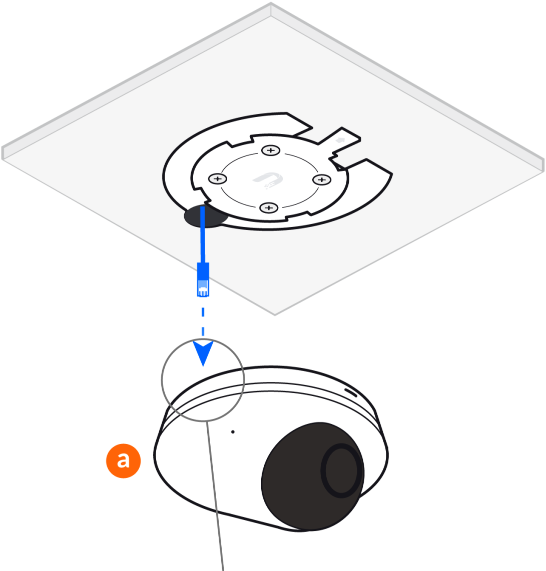

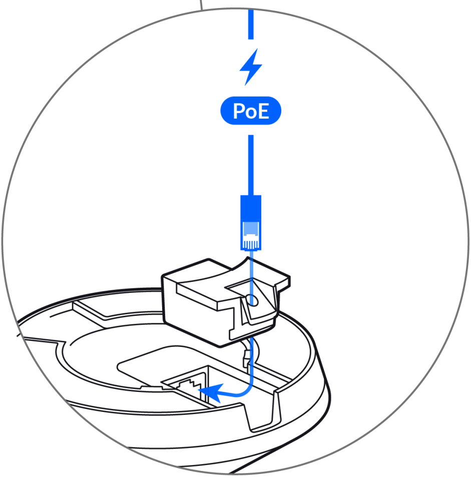

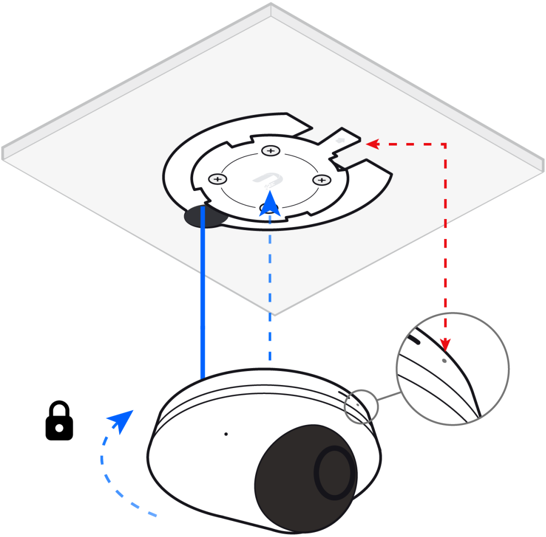

B

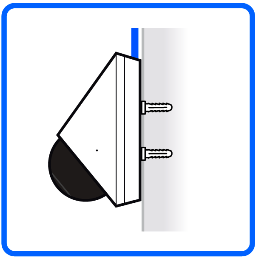

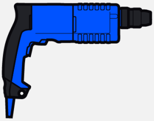

1

Ø6mm
(Ø1/4”)

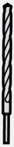

2

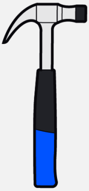

3

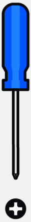

4

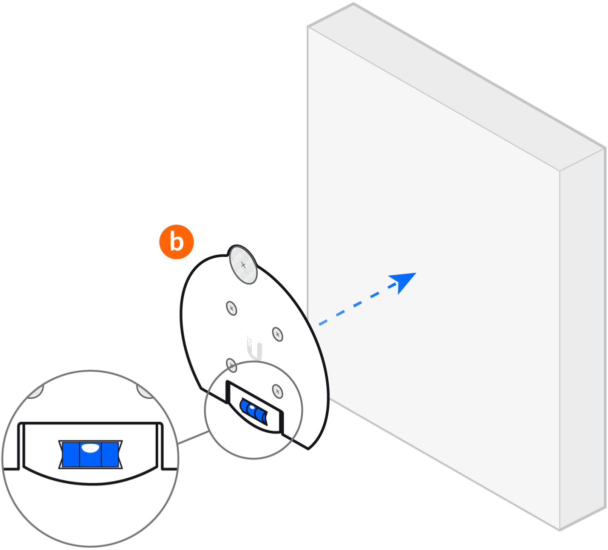

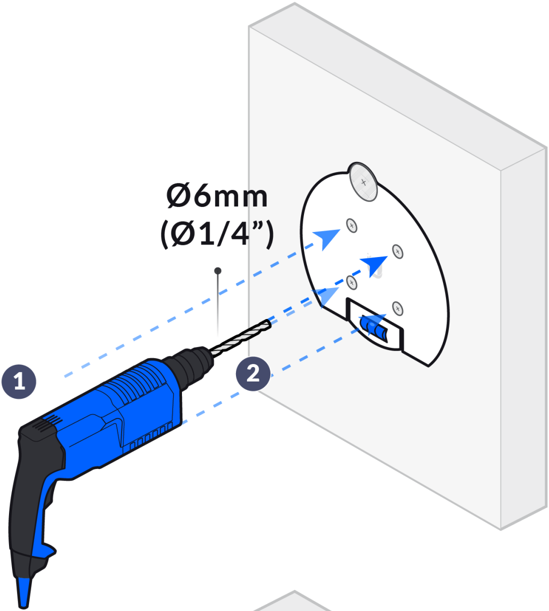

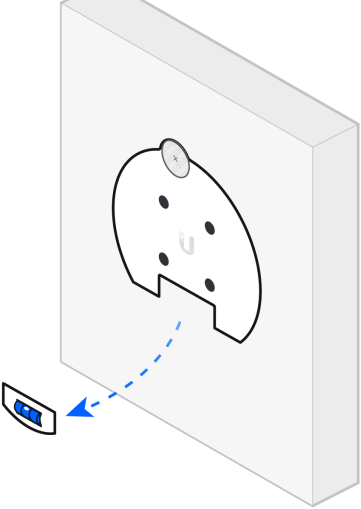

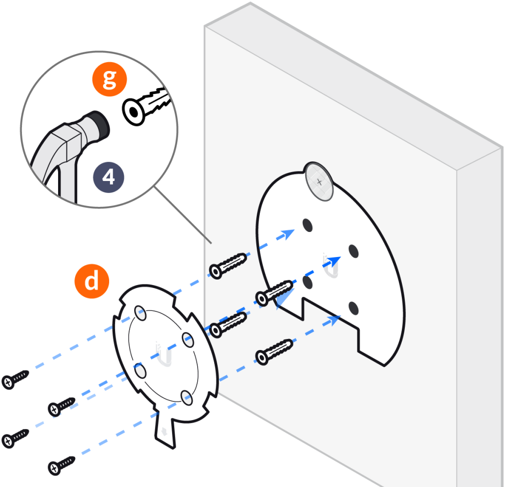

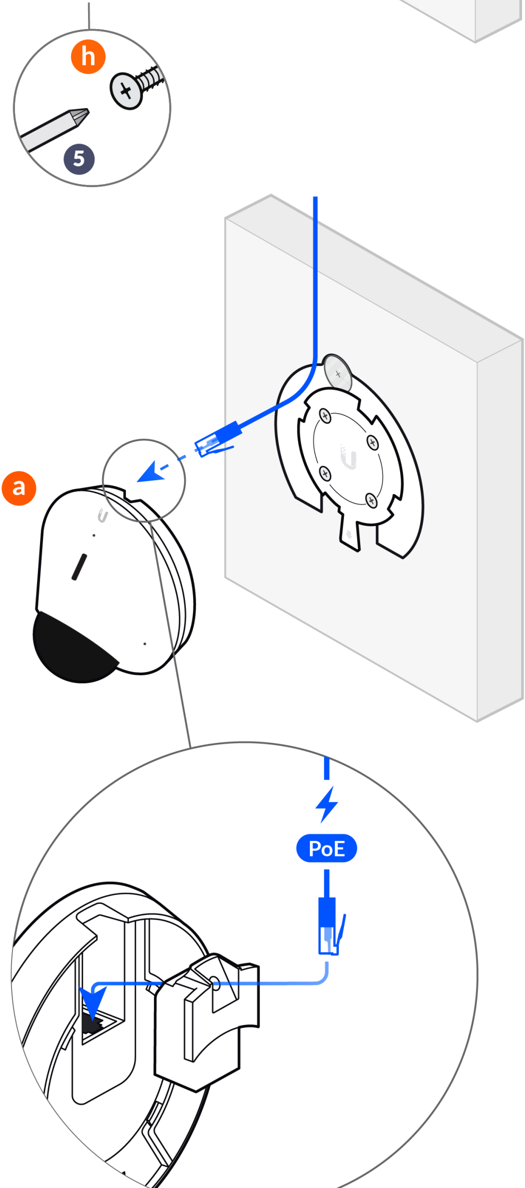

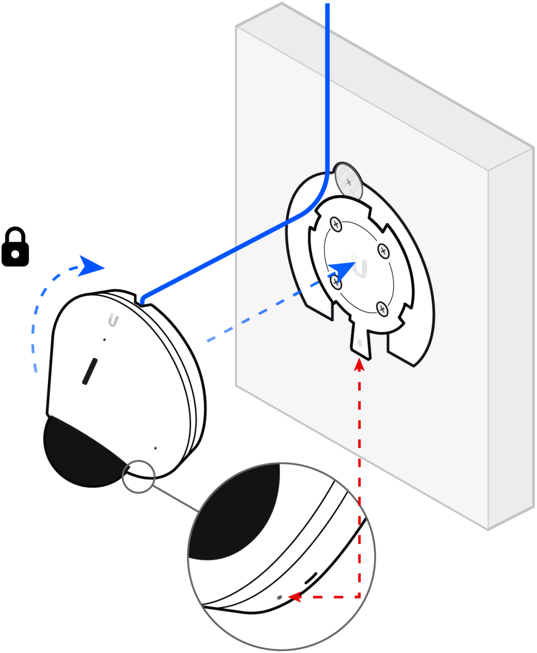

C

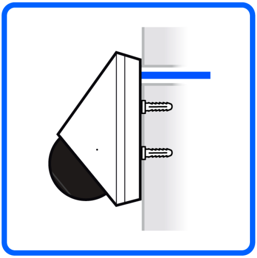

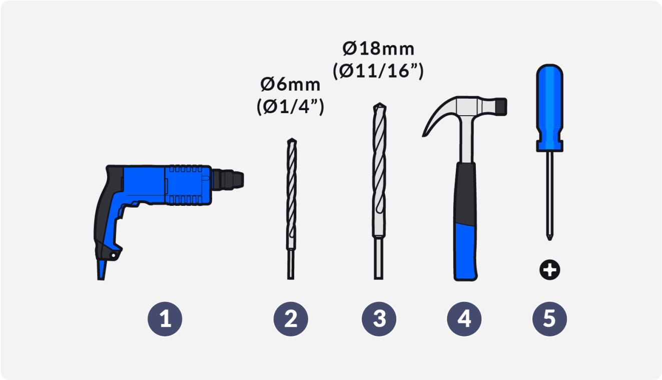
Ø6mm
(Ø1/4”)
Ø18mm
(Ø11/16”)
1
2
3
4
5

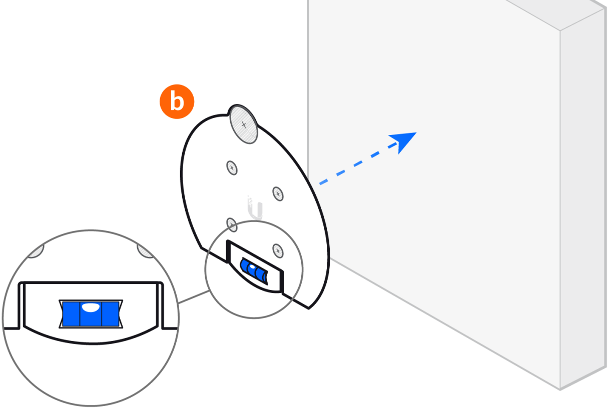

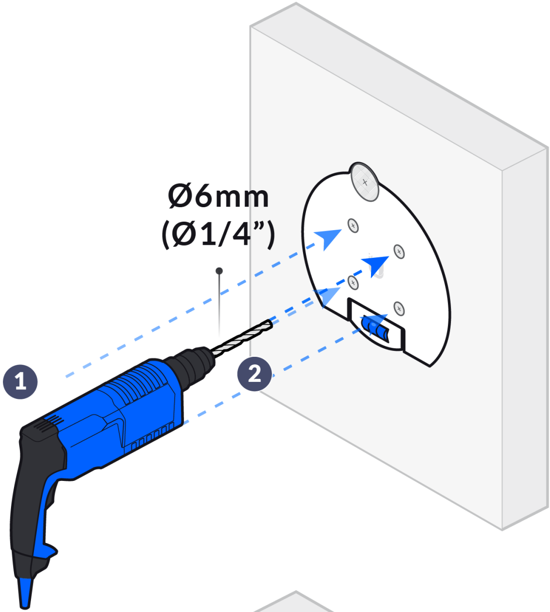
Ø6mm
(Ø1/4”)

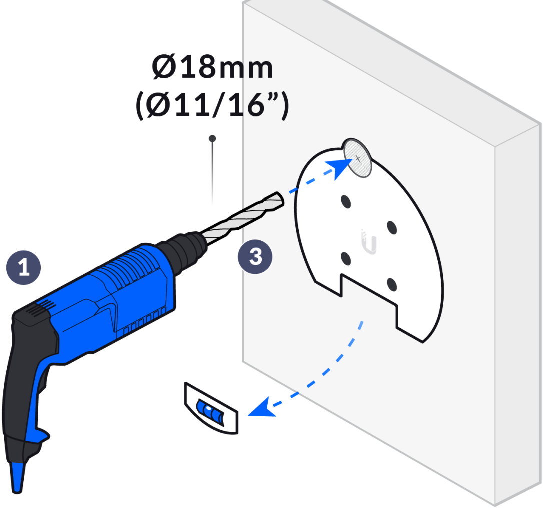
Ø18mm
(Ø11/16")
1
3

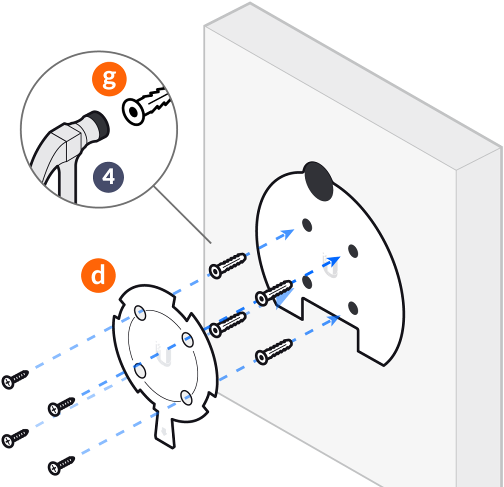

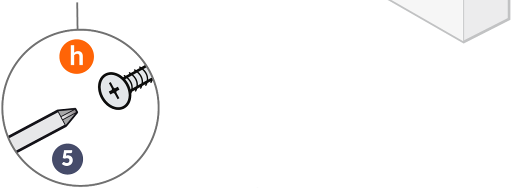

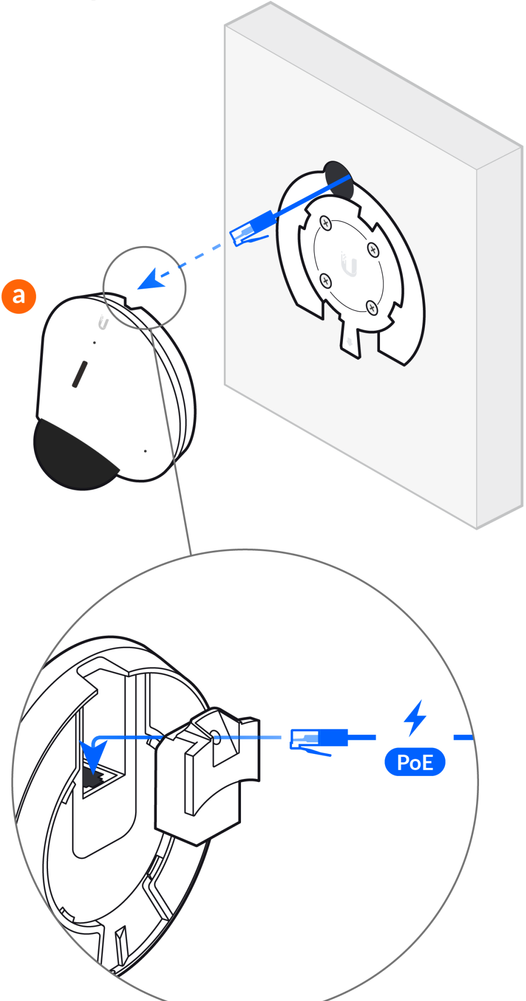

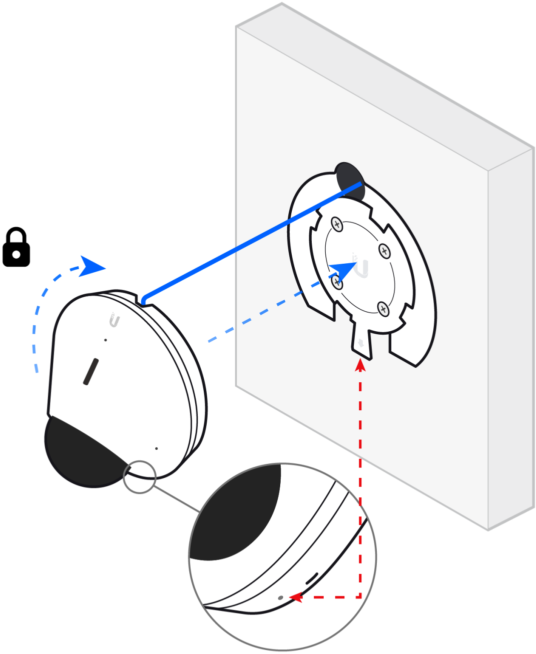

2

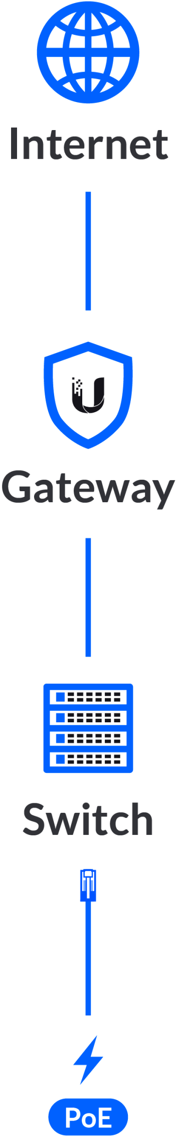
Internet
Gateway
Switch
PoE

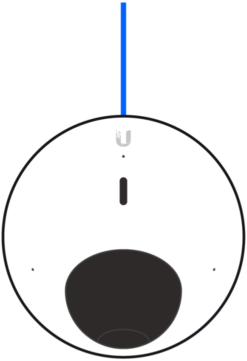

3

Download on the App Store

GET IT ON Google Play

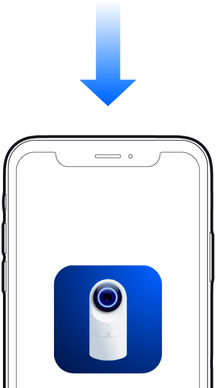

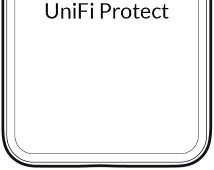
UniFi Protect

4

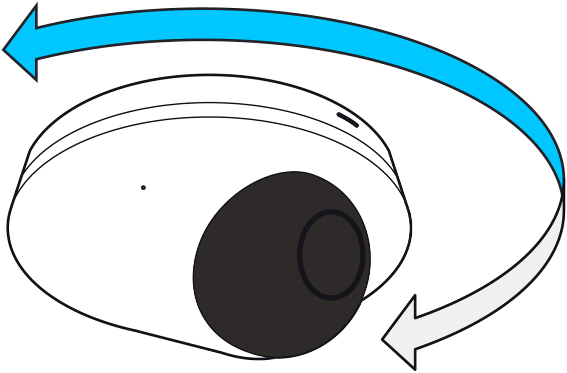

5

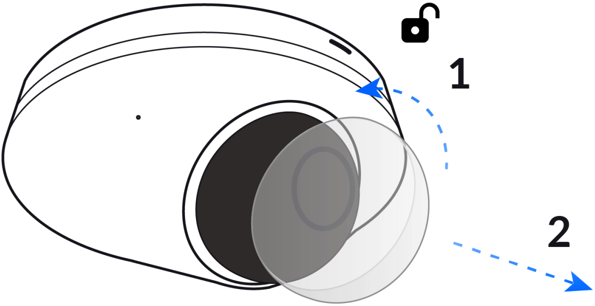

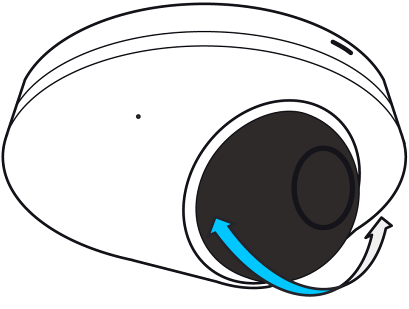

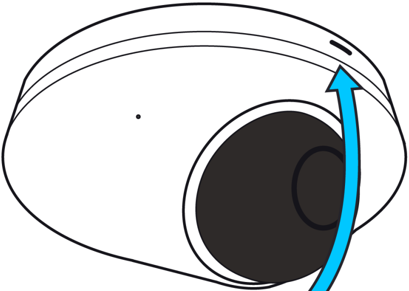

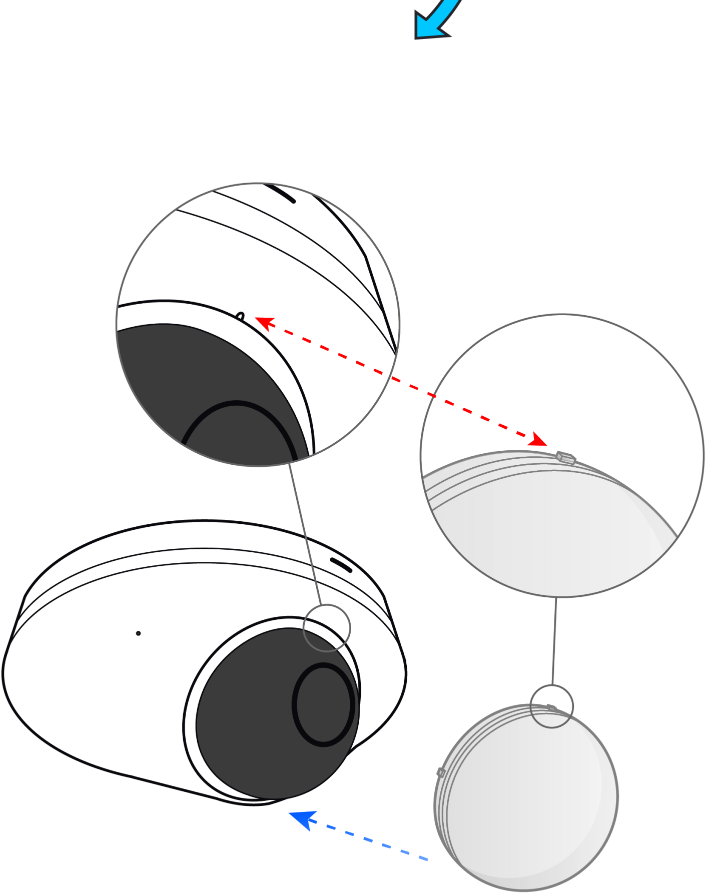

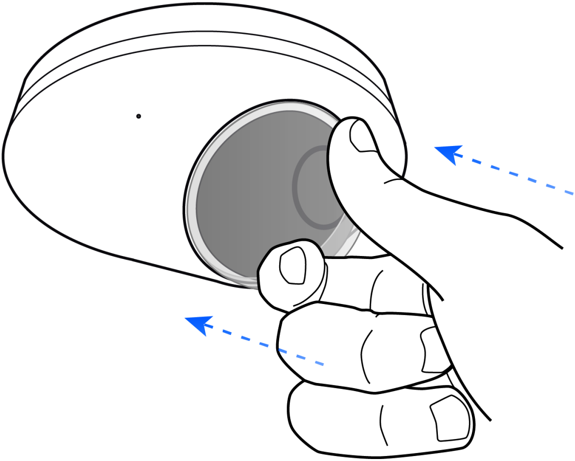

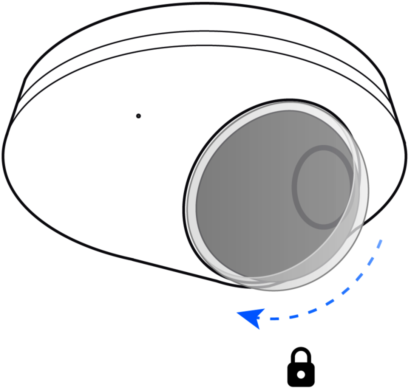

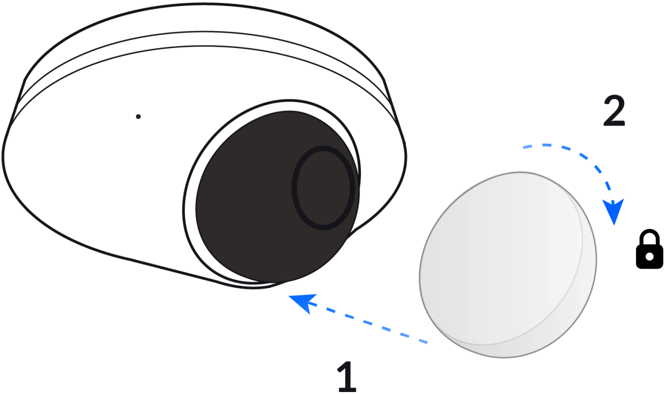

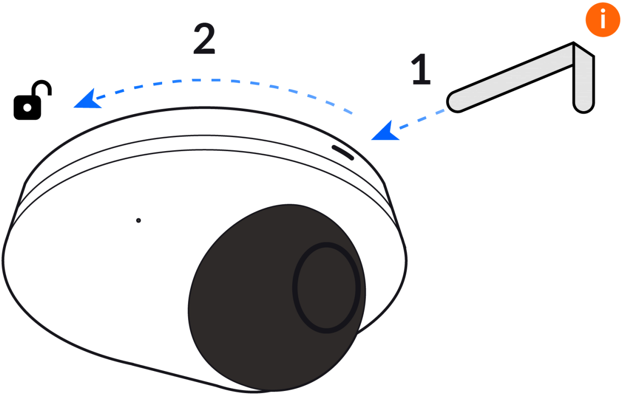

Get Answers
help.ui.com

UniFi Protect

UI Support

🔗

🔗

©2020 Ubiquiti Inc. All rights reserved. Ubiquiti, the Ubiquiti U logo, the Ubiquiti beam logo, UniFi Protect, and UniFi are trademarks or registered trademarks of Ubiquiti Inc. in the United States and in other countries. Apple an the Apple logo are tradmarks of Apple Inc., registered in the U.S. and other countries. App Store is a service mark of Apple, Inc., registered in the U.S. and other countries. Android, Google, Google Play, the Google Play logo and other marks are trademarks of Google LLC. All other trademarks are the property of their respective owners.